CROSS-SECTION A-A
1:5

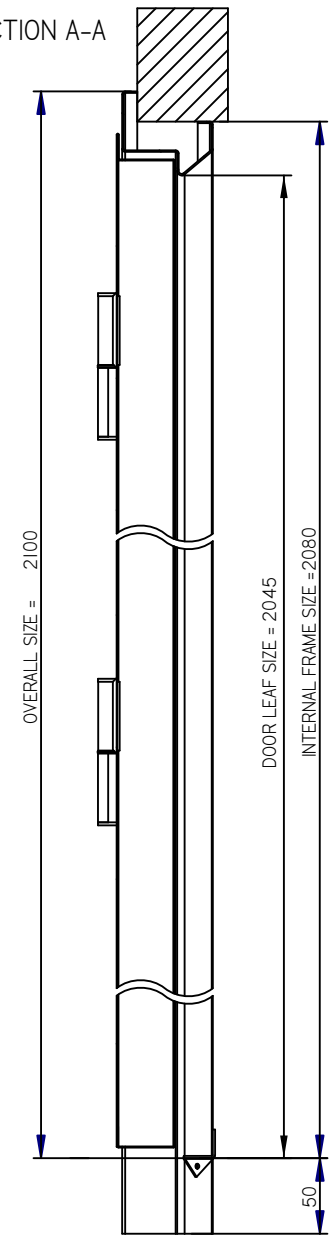

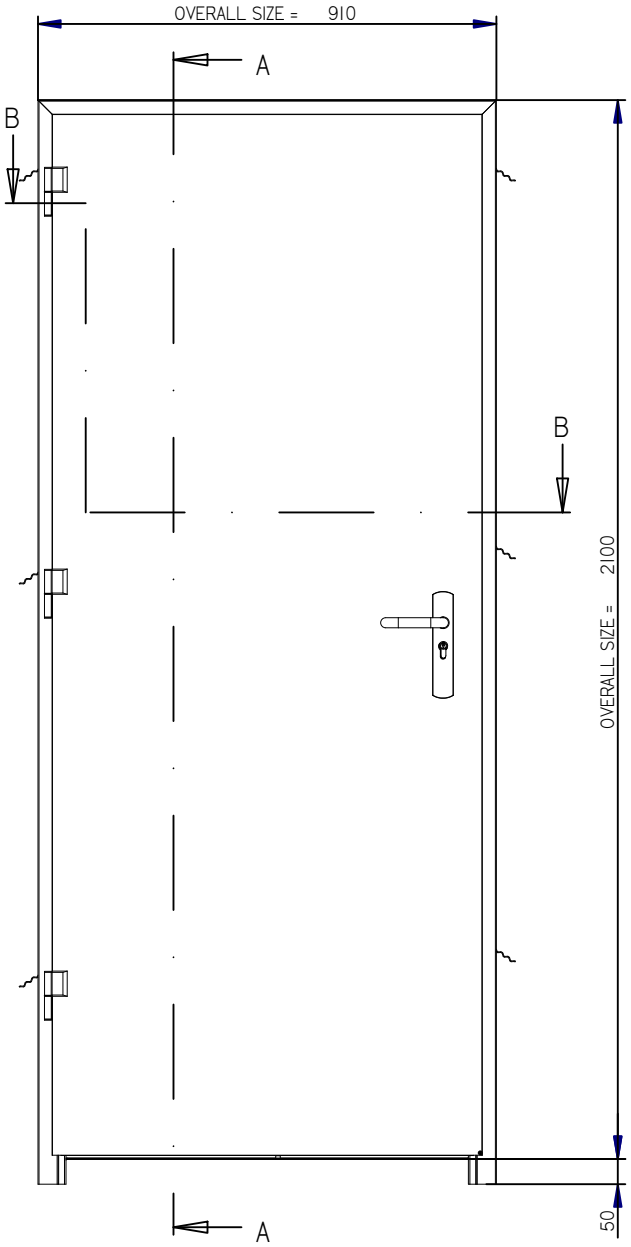

CROSS-SECTION B-B
1:8

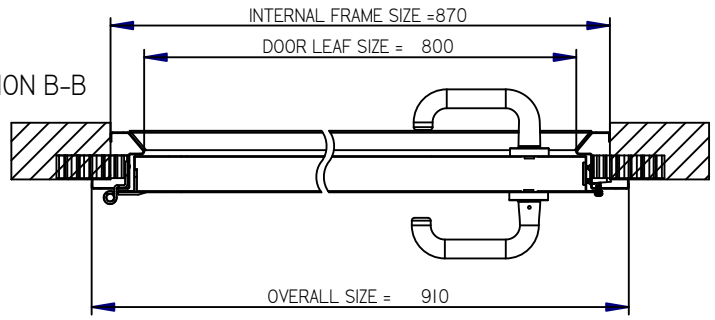

	Name	Date			
Drawn	Lucia	16/10/2008	Comments:	Plan No.:	
Modified	Lucia	16/10/2008		Code Libra:	---
Scale 1:15	Designation Puerta ENSAMBLADA 800x2100 CS4				

andreu